ELTE
High speed precision spindles

DATASHEET

AF 270 CU EV HSK B100

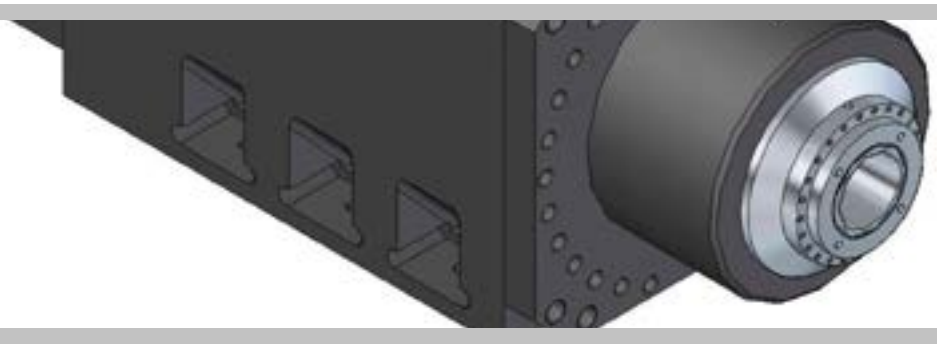
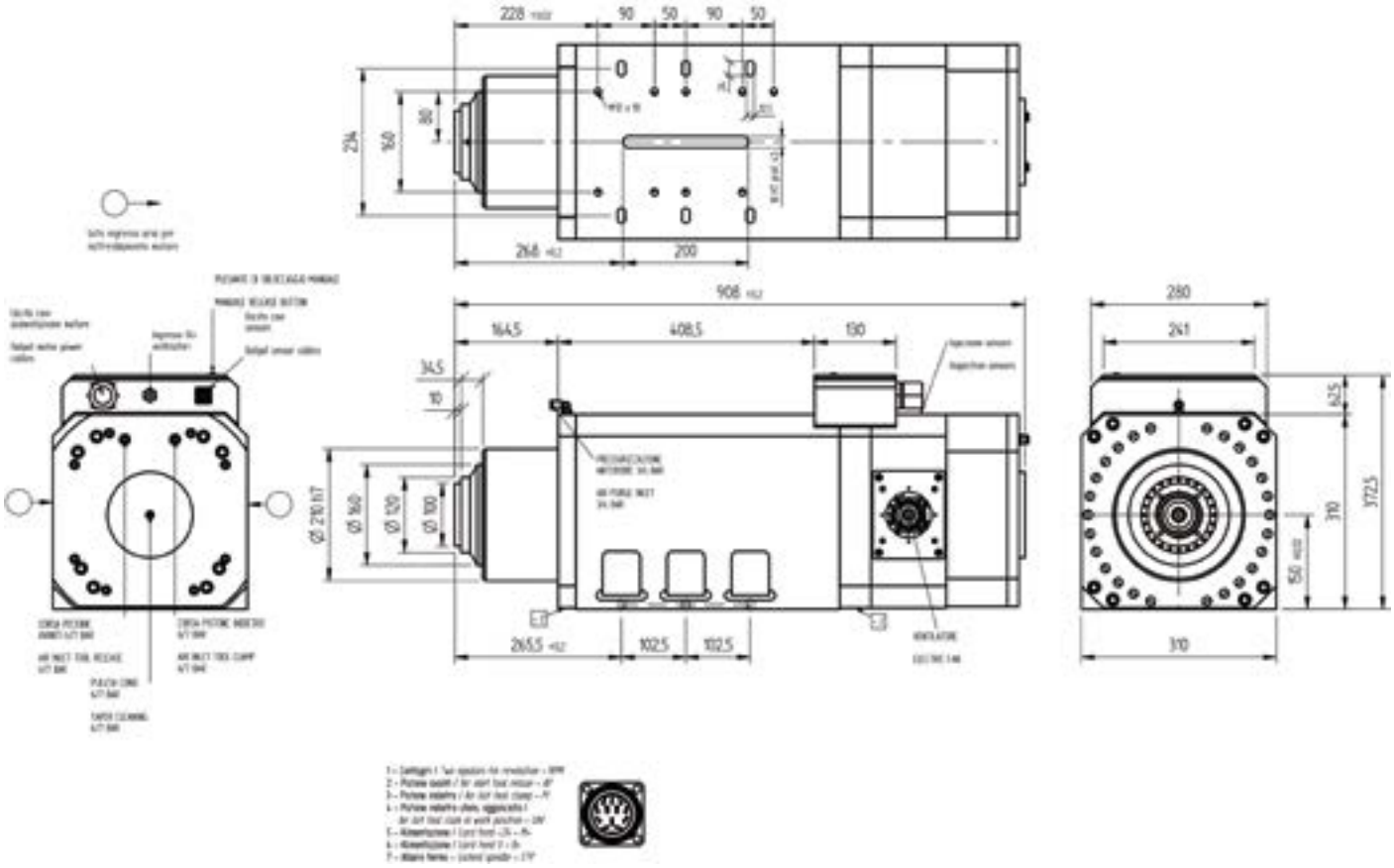
TYPE		VOLTAGE [Volt]	FREQUENCY [Hz]	RPM	DELIVER POWER [Kw]	ABSOR. [Amp]	Cos j	WEIGHT [Kg]
AF 270 25/2 CU HSK B100	Electric Fan	400/690	50	3000 (2 poli)	42,0	72,7/42,0	0,92	250